Ship Record Sheet (Class 7)

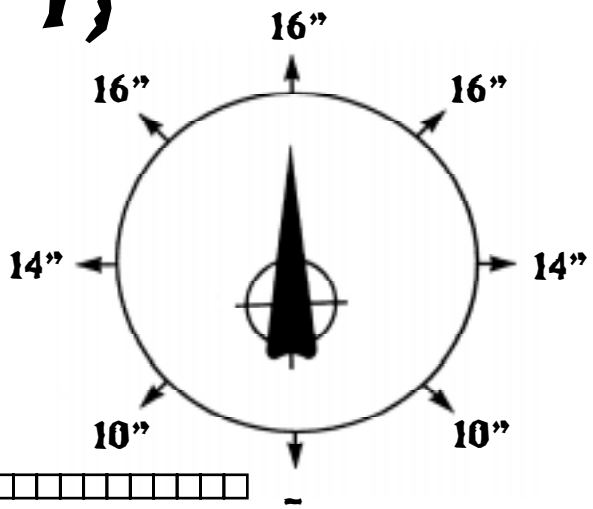

Ship:_____

Captain:_____

Captain's Reputation:_____

_____

Base Initiative: 1

Hull Type: Wide, 3 center sections

Base Movement: 16”

Starting Crew

☐☐☐